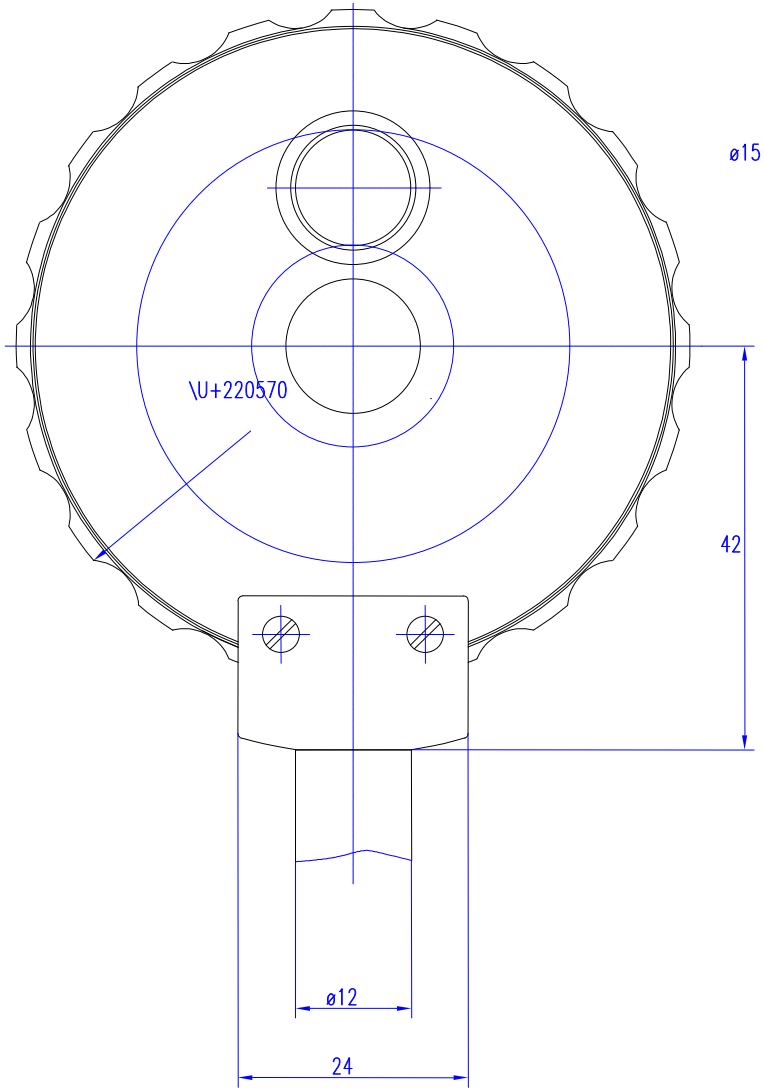

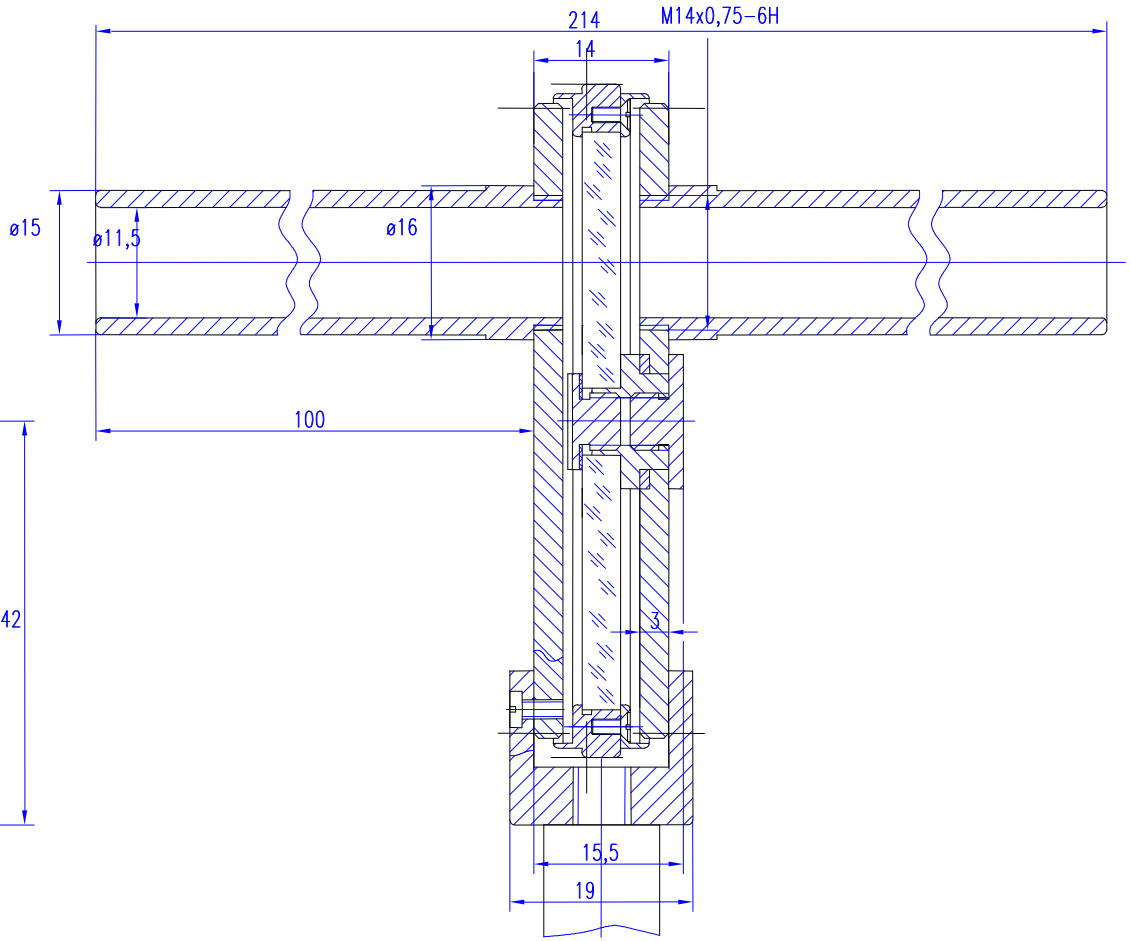

	Jaeger	15.01.2002	Diffractive Variable Attenuator	1/2002
				TOPAG

2:1

V1.2-3A/7